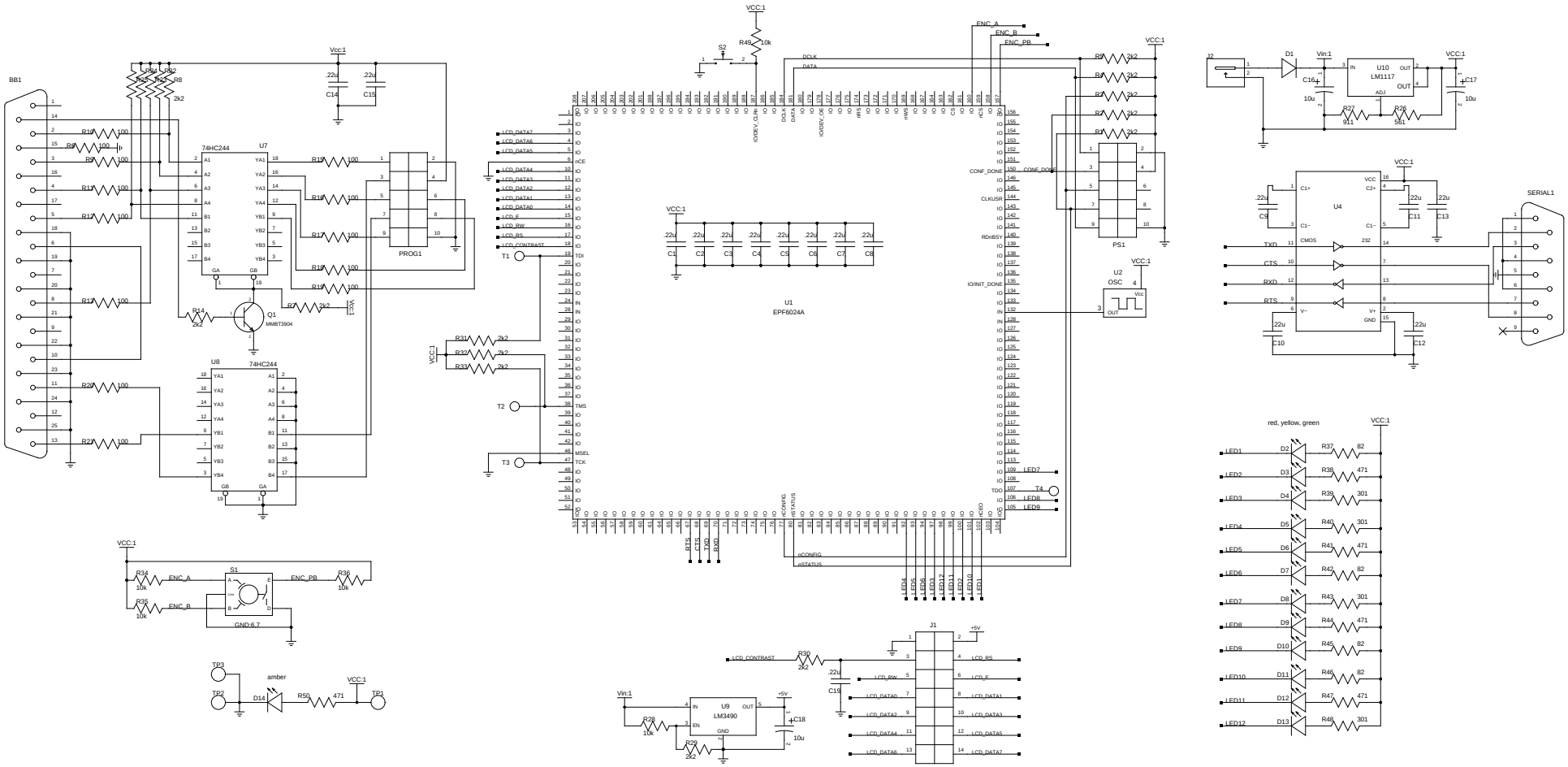
BB1
Vcc:1
C14 22u
C15 22u
R13 R14 R15 R8 2k2
R10 100
R9 100
R9 100
R11 100
R12 100
R17 100
R20 100
R21 100
74HC244
U7
R15 100
R16 100
R17 100
R18 100
R19 100
PROG1
R14 2k2
Q1
MMBT3904
R7 2k2
U8
74HC244
VCC:1
R34 10k
ENC_A
S1
ENC_PB
R36 10k
R35 10k
ENC_B
GND:6,7
TP3
TP2
amber
D14
R50 471
TP1
VCC:1
R49 10k
S2
ENC_A
ENC_B
ENC_PB
DCLK
DATA
LCD_DATA7
LCD_DATA6
LCD_DATA5
LCD_DATA4
LCD_DATA3
LCD_DATA2
LCD_DATA1
LCD_DATA0
LCD_E
LCD_RW
LCD_RS
LCD_CONTRAST
T1
T2
T3
R31 2k2
R32 2k2
R33 2k2
U1
EPF6024A
CONF_DONE
CLKUSR
RDnBSY
IO/INT_DONE
TDO
LED7
LED8
LED9
T4
LED4
LED5
LED6
LED3
LED12
LED11
LED2
LED10
LED1
nCONFIG
nSTATUS
RTS
CTS
TXD
RXD
TMS
TCK
MSEL
C1 22u
C2 22u
C3 22u
C4 22u
C5 22u
C6 22u
C7 22u
C8 22u
R2 2k2
R3 2k2
R4 2k2
R5 2k2
R6 2k2
PS1
U2
OSC
VCC:1
LCD_CONTRAST
R30 2k2
C19 22u
J1
+5V
LCD_RS
LCD_RW
LCD_E
LCD_DATA0
LCD_DATA1
LCD_DATA2
LCD_DATA3
LCD_DATA4
LCD_DATA5
LCD_DATA6
LCD_DATA7
Vin:1
U9
LM3490
R28 10k
R29 2k2
C18 10u
D1
Vin:1
C16 10u
U10
LM1117
ADJ
R27 911
R26 561
C17 10u
U4
C9 22u
C10 22u
C11 22u
C12 22u
C13 22u
TXD
CTS
RXD
RTS
SERIAL1
red, yellow, green
LED1 D2 R37 82
LED2 D3 R38 471
LED3 D4 R39 301
LED4 D5 R40 301
LED5 D6 R41 471
LED6 D7 R42 82
LED7 D8 R43 301
LED8 D9 R44 471
LED9 D10 R45 82
LED10 D11 R46 82
LED11 D12 R47 471
LED12 D13 R48 301